BAND PASS FILTER
SURFACE MOUNT MODEL: FNS-10.7

OPTIMIZED BANDWIDTH — Fc = 10.7 MHz

FEATURES:

- Low Loss
- Small Size
- High Rejection

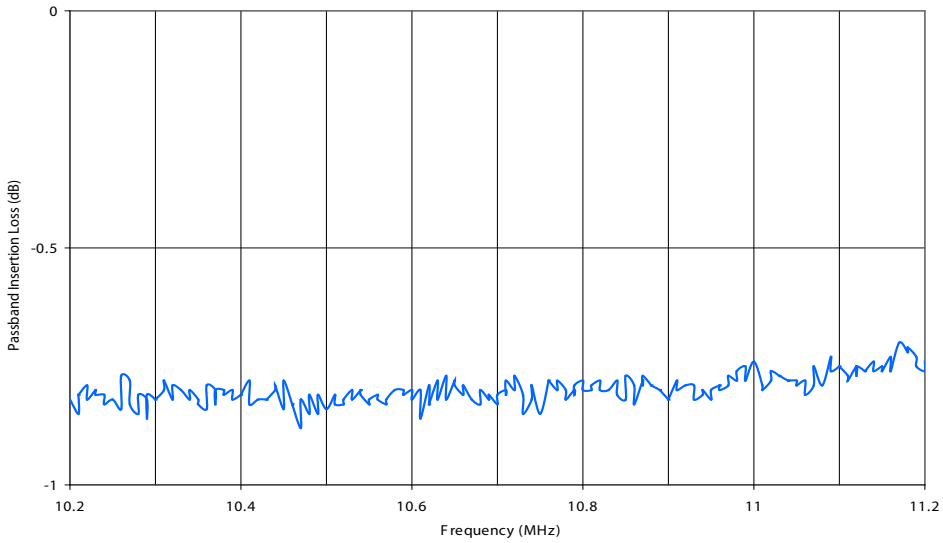

SPECIFICATIONS (Rev. B 08/05/09)

Center Frequency	10.7 MHz
Passband Frequency	10.2 - 11.2 MHz
Insertion Loss	1.7 dB (Max.)
35 dB Bandwidth	5.1 - 22.5 MHz
Power Rating	1 Watt (Max.)
Impedance	50 Ohms (Nom.)
VSWR (Passband)	1.5:1
Operating Temperature Range	-20 to +70 °C

Package #	124S

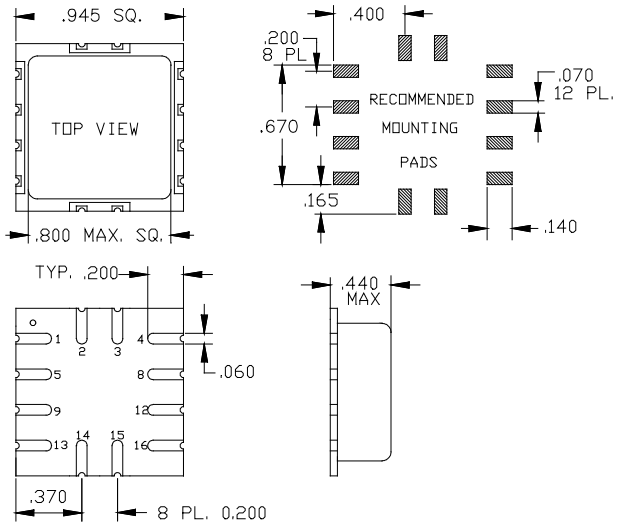

PORT CONFIGURATION		
Input	Output	Gnd.
1	16	All Other

Copyright © Synergy Microwave Corporation
201 McLean Boulevard • Paterson, New Jersey 07504 • Tel: (973) 881-8800 • Fax: (973) 881-8361
E-Mail: sales@synergymwave.com • World Wide Web: http://www.synergymwave.com

SYNERGY® MICROWAVE CORPORATION

BAND PASS FILTER
SURFACE MOUNT MODEL: FNS-10.7

OPTIMIZED BANDWIDTH **Fc = 10.7 MHz**

PERFORMANCE PLOTS

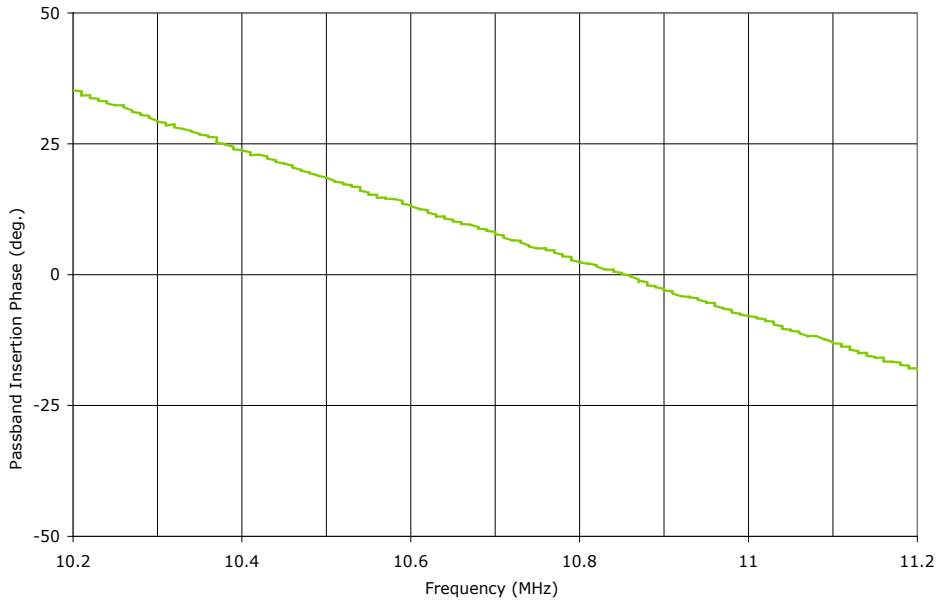

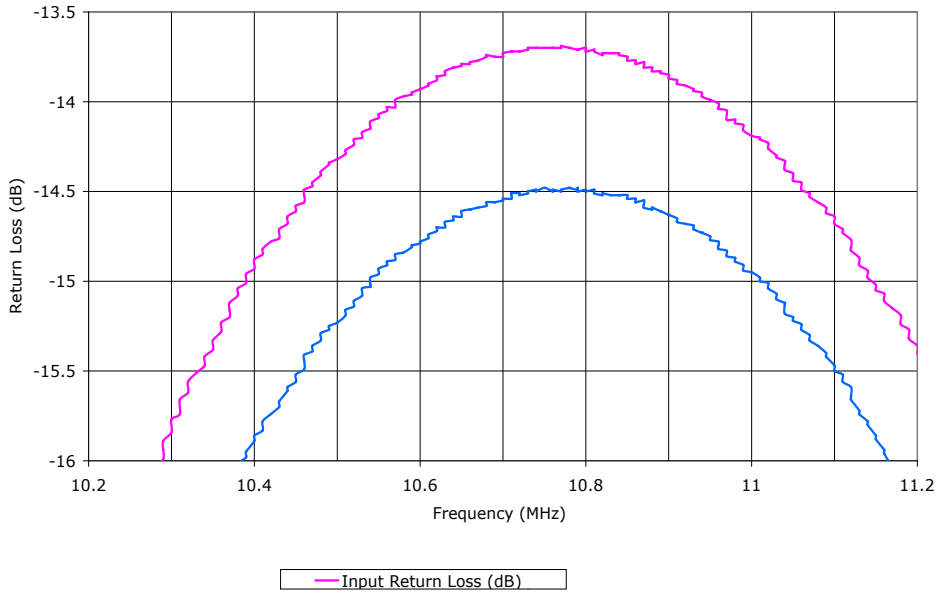

Copyright © Synergy Microwave Corporation
201 McLean Boulevard • Paterson, New Jersey 07504 • Tel: (973) 881-8800 • Fax: (973) 881-8361
E-Mail: sales@synergymwave.com • World Wide Web: http://www.synergymwave.com

SYNERGY® MICROWAVE CORPORATION

BAND PASS FILTER
SURFACE MOUNT MODEL: FNS-10.7

OPTIMIZED BANDWIDTH **Fc = 10.7 MHz**

PERFORMANCE PLOTS

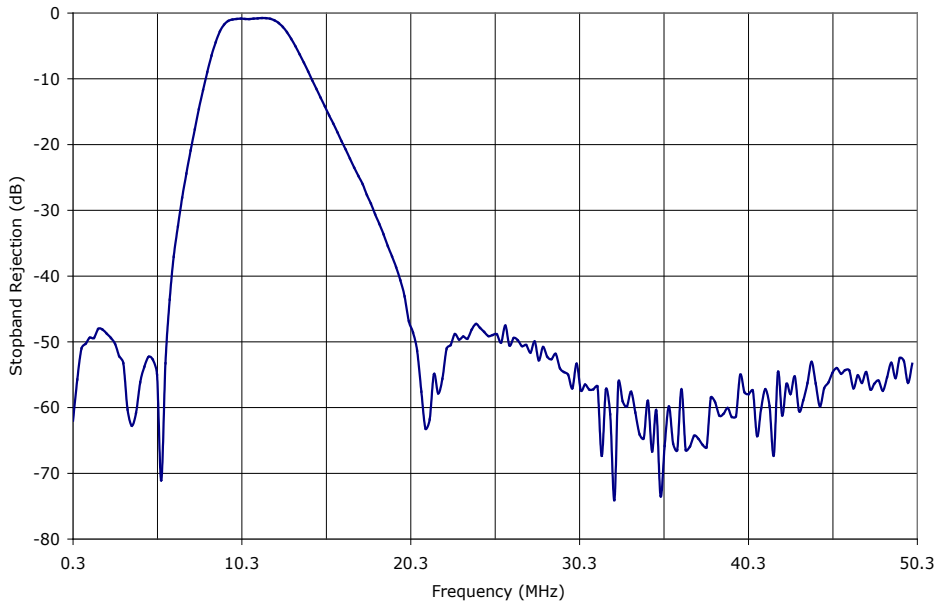

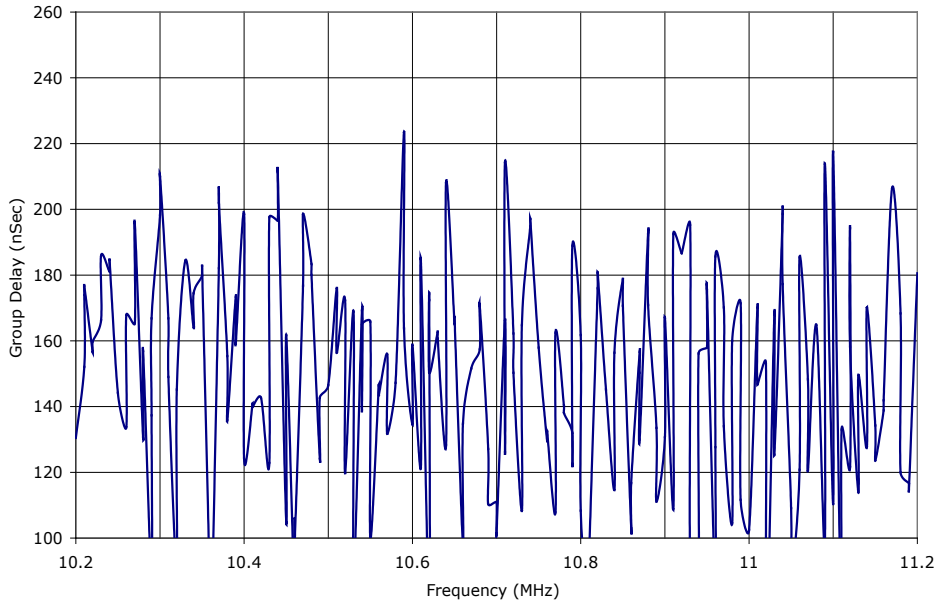

Copyright © Synergy Microwave Corporation
201 McLean Boulevard • Paterson, New Jersey 07504 • Tel: (973) 881-8800 • Fax: (973) 881-8361
E-Mail: sales@synergymwave.com • World Wide Web: http://www.synergymwave.com

SYNERGY® MICROWAVE CORPORATION