DIRECTIONAL COUPLER
CONNECTORIZED MODEL: KBK1200SL

WIDE BANDWIDTH — 15 - 2000 MHz

FEATURES:
- Wide Bandwidth
- Good Coupling Flatness

APPLICATION:
- Signal Monitoring
- Signal Splitting
- Signal Detection

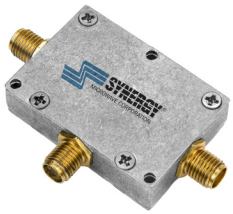

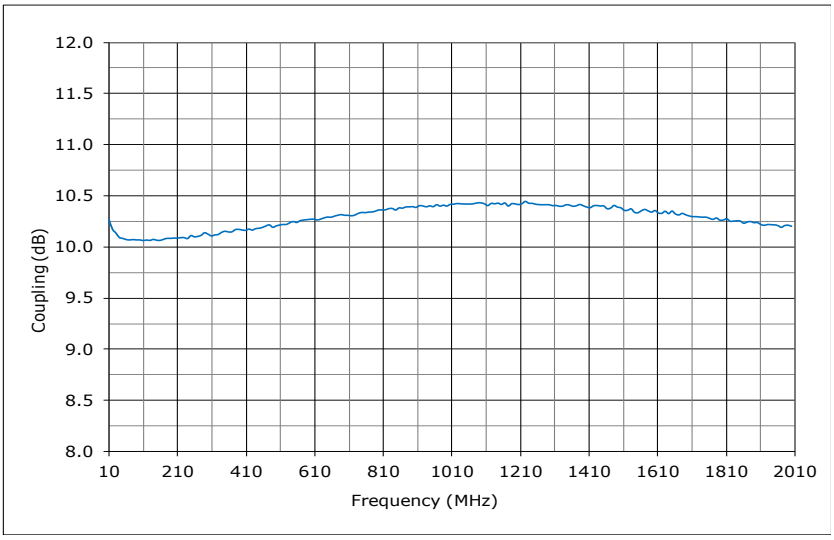

SPECIFICATIONS

Frequency	10 - 2000 MHz
Coupling	10.3 ±0.5 dB
Coupling Flatness	±0.8 dB (Max.)
Mainline Loss *	
Directivity (dB)	
Input Power	1 Watt (Max.)
Impedance	50 Ohms (Nom.)
VSWR	1.4:1 (Typ.)
Operating Temperature Range	-55 to +85 °C

Mainline Loss

Freq. (MHz)	Typ.	Max.
10 - 100	1.5	2.0
100 - 1000	1.2	1.8
1000 - 2000	1.8	2.7

Directivity (dB)

Freq. (MHz)	Typ.	Min.
10 - 100	20	17
100 - 1000	20	18
1000 - 2000	20	18

** Includes 0.46 dB theoretical split loss.*

Package #	486

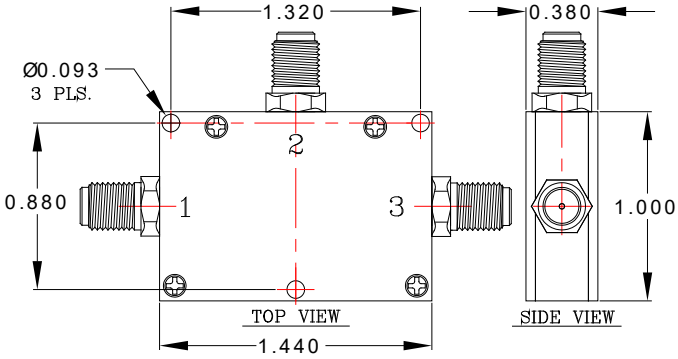

PORT CONFIGURATION		
Input	Output	Coupled
1	2	3

Copyright © Synergy Microwave Corporation
201 McLean Boulevard • Paterson, New Jersey 07504 • Tel: (973) 881-8800 • Fax: (973) 881-8361
E-Mail: sales@synergymwave.com • World Wide Web: http://www.synergymwave.com

SYNERGY® MICROWAVE CORPORATION

DIRECTIONAL COUPLER
CONNECTORIZED MODEL: KBK1200SL

WIDE BANDWIDTH **15 - 2000 MHz**

PERFORMANCE PLOTS

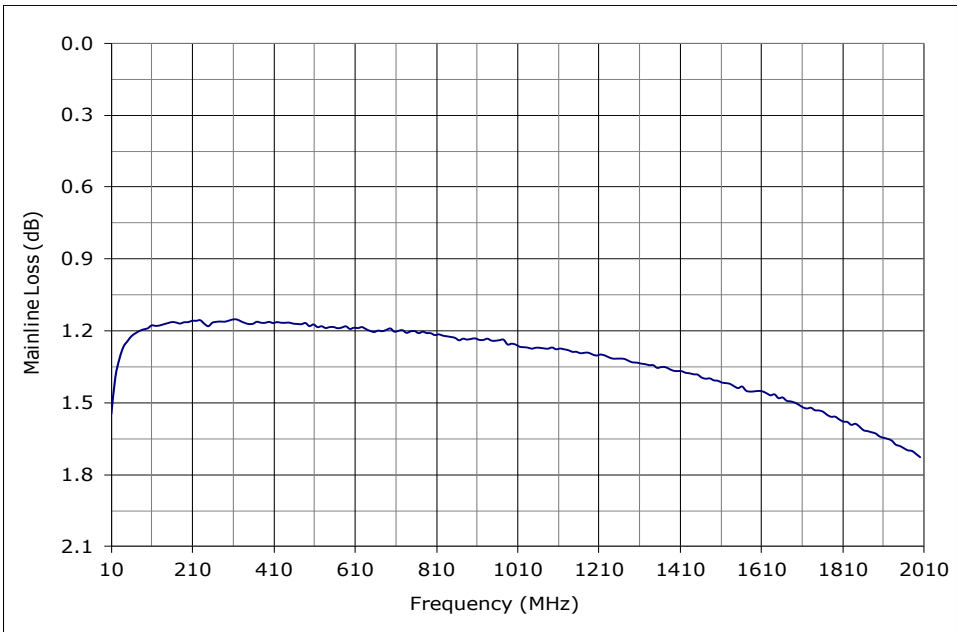

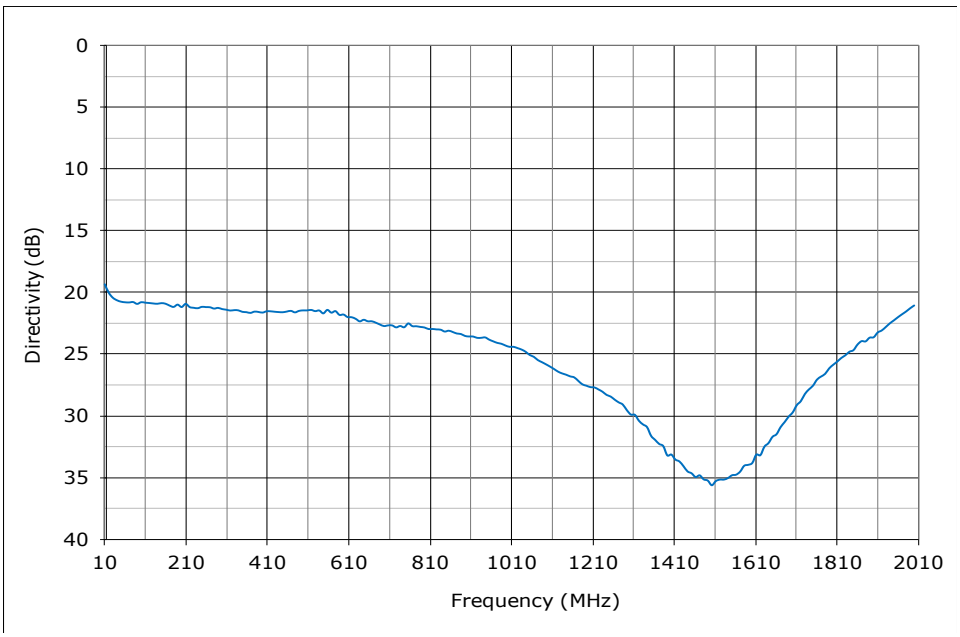

Copyright © Synergy Microwave Corporation
201 McLean Boulevard • Paterson, New Jersey 07504 • Tel: (973) 881-8800 • Fax: (973) 881-8361
E-Mail: sales@synergymwave.com • World Wide Web: http://www.synergymwave.com

SYNERGY® MICROWAVE CORPORATION

DIRECTIONAL COUPLER
CONNECTORIZED MODEL: KBK1200SL

WIDE BANDWIDTH **15 - 2000 MHz**

PERFORMANCE PLOTS

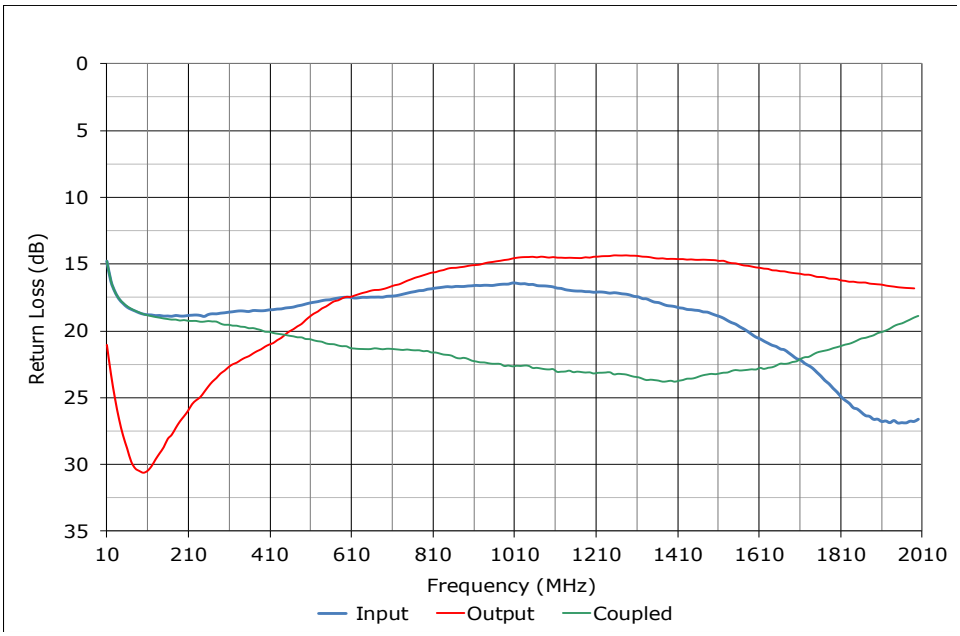

Copyright © Synergy Microwave Corporation
201 McLean Boulevard • Paterson, New Jersey 07504 • Tel: (973) 881-8800 • Fax: (973) 881-8361
E-Mail: sales@synergymwave.com • World Wide Web: http://www.synergymwave.com

SYNERGY® MICROWAVE CORPORATION