PHASE SHIFTER
PLUG-IN MODEL: PP-924

2:1 BANDWIDTH — 20 - 40 MHz

FEATURES:

- Over 90º of Phase Shift
- Low Tuning Voltage
- Excellent Performance
- Low VSWR
- High Efficiency

SPECIFICATIONS (Rev. B 01/13/09)

Frequency	20 - 40 MHz
Insertion Loss (dB)	Typ. 1.2 / Max. 1.8
Control Bandwidth	DC to 50 kHz (Min.)
Control Voltage	0 - 15 Volts
Phase Shift	180º (Min.)
VSWR	1.7:1 (Max.)
Input Power	0 dBm (Max.)
Impedance	50 Ohms (Nom.)
Operating Temperature Range	-55 to +85 °C

Package # 124

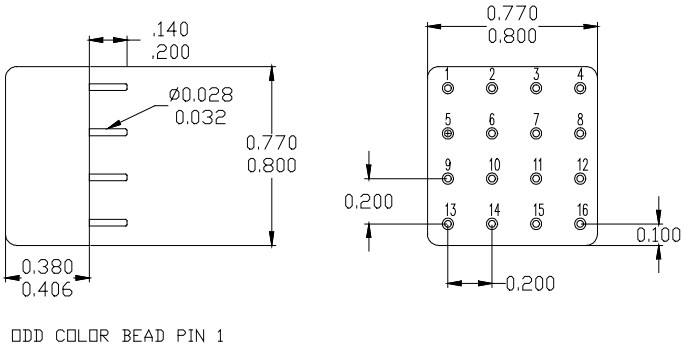

PORT CONFIGURATION			
Input	Output	Control	Case GND
1	13	4	All Others

Copyright © Synergy Microwave Corporation
201 McLean Boulevard • Paterson, New Jersey 07504 • Tel: (973) 881-8800 • Fax: (973) 881-8361
E-Mail: sales@synergymwave.com • World Wide Web: http://www.synergymwave.com

SYNERGY® MICROWAVE CORPORATION

PHASE SHIFTER
PLUG-IN MODEL: PP-924

2:1 BANDWIDTH **20 - 40 MHz**

PERFORMANCE PLOTS

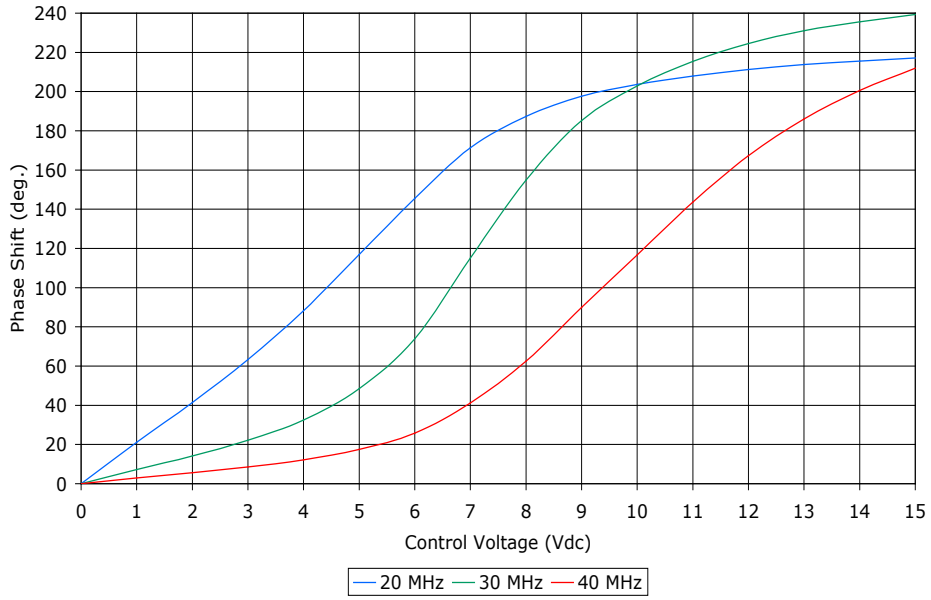

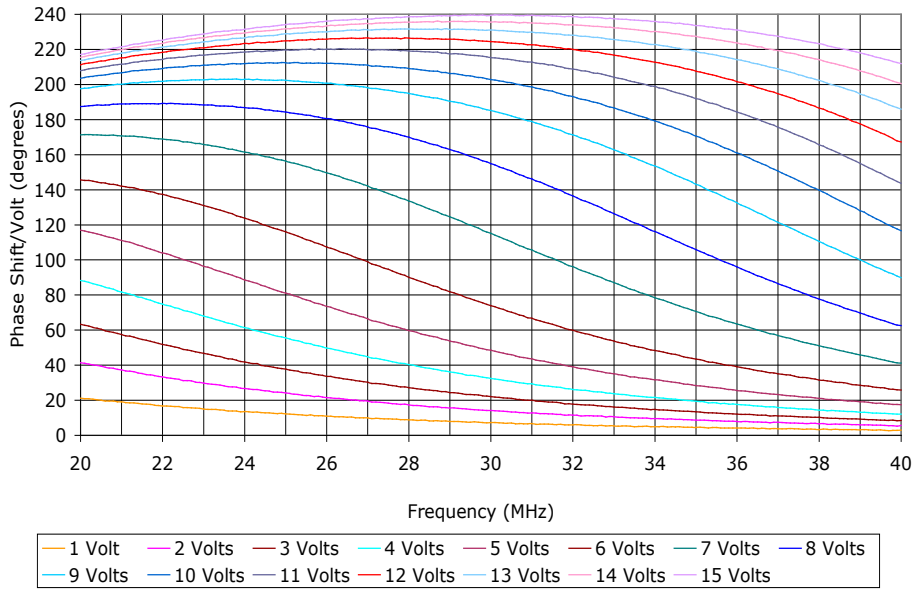

Copyright © Synergy Microwave Corporation
201 McLean Boulevard • Paterson, New Jersey 07504 • Tel: (973) 881-8800 • Fax: (973) 881-8361
E-Mail: sales@synergymwave.com • World Wide Web: http://www.synergymwave.com

SYNERGY® MICROWAVE CORPORATION

PHASE SHIFTER
PLUG-IN MODEL: PP-924

2:1 BANDWIDTH **20 - 40 MHz**

PERFORMANCE PLOTS

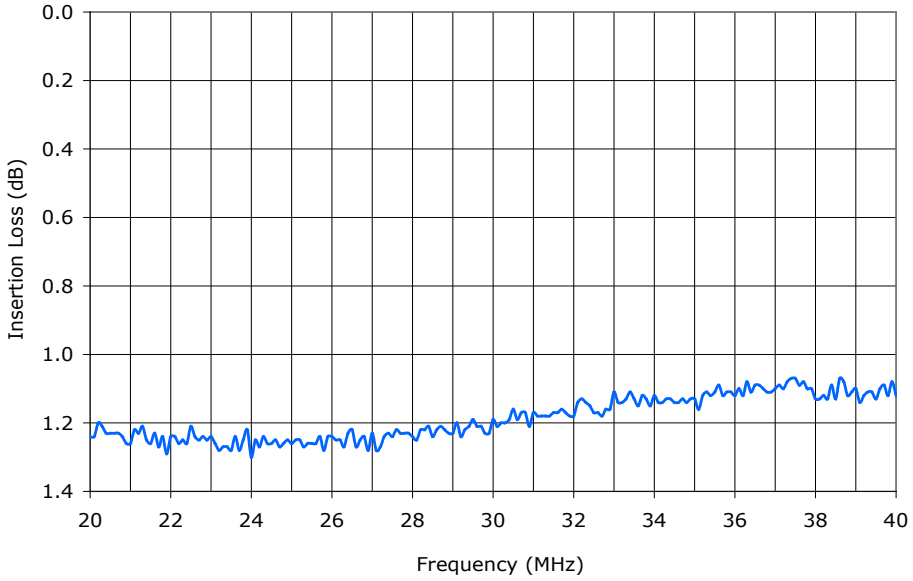

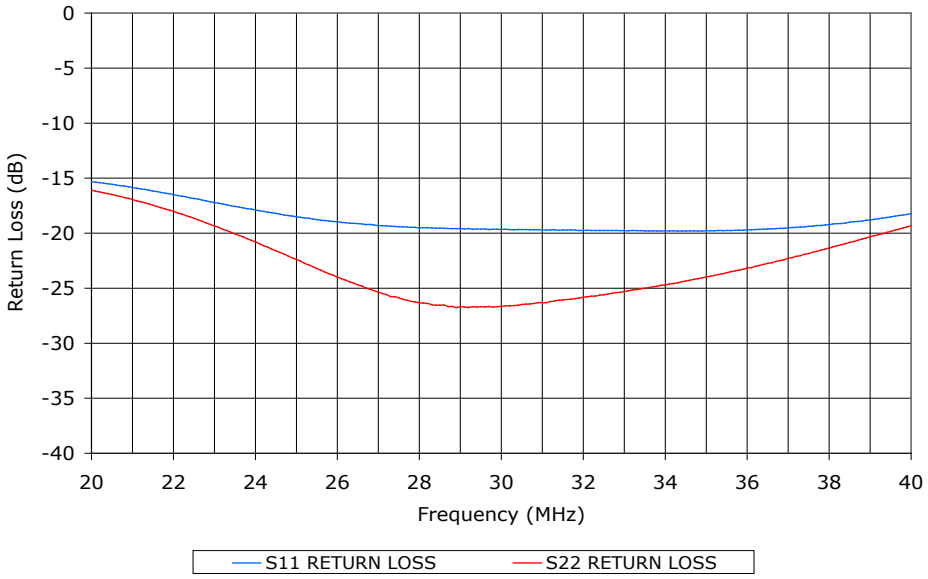

Copyright © Synergy Microwave Corporation
201 McLean Boulevard • Paterson, New Jersey 07504 • Tel: (973) 881-8800 • Fax: (973) 881-8361
E-Mail: sales@synergymwave.com • World Wide Web: http://www.synergymwave.com

SYNERGY® MICROWAVE CORPORATION